# Temtrol®

## Temtrol... Manufacturing OEM & Replacement Coils Since 1955

## Coils Designed to Fit Your Requirements

- Chilled & Hot Water
- Direct Expansion
- Steam Distributing
- Condenser
- Standard Steam
- Quick Ship Program with Five or Ten Day Shipping
- ARI-certified Computer Software Available for Coil Selection

MANUFACTURER CERTIFIED TO ARI AS COMPLYING WITH FORCED-CIRCULATION AIR-COOLING and AIR-HEATING COILS ARI STANDARD 410

# TEMTROL COILS

## OEM & REPLACEMENT COILS

*For more than fifty years, engineers across the United States have considered the name "Temtrol" to be synonymous with quality, dependability and flexibility in the design and manufacture of air handling units, OEM and replacement coils.*

*Located in Okarche, Oklahoma (a suburb of Oklahoma City), Temtrol has maintained its reputation for excellence by adhering to the philosophy that technical knowledge and innovation must go hand-in-hand with old-fashioned reliability to insure a company's success. Ongoing research programs have helped Temtrol maintain this prominent standing.*

*Temtrol was established in 1955 for the manufacturing of air handling equipment of the highest quality for commercial and industrial users. It was one of the first companies to offer its customers flexibility in terms of optional design and construction features. Consulting engineers who had been limited to working with standard modular units produced by catalog manufacturers on high speed production lines now have the option of having an HVAC unit custom-tailored to meet their special requirements. With Temtrol, they are guaranteed that the unit selected will do more than "just suit the project needs" because it's specifically designed for a particular job.*

*Today, Temtrol's product line continues to grow and expand, as have its production facilities. Modern manufacturing space now exceeds 250,000 square feet.*

*Temtrol's standard product line encompasses a complete product offering according to current industry standards, including heating and cooling coils that have earned a reputation for quality and performance, and air handling units that utilize fans picked at the peak of the curve for energy efficiency and quiet operation. Each system is designed with an eye toward cost-effectiveness and a goal of customer satisfaction.*

*Temtrol's industrial and commercial customers, primarily the owners and builders of office buildings, manufacturing and retail facilities, schools and hospitals, can be found from California to Connecticut.*

# COIL MODEL FORMAT:

4 WC 4 - 30 x 60 x 4 - 10 A - RH

Tube Diameter in 1/8 inch & Spacing (in inches)
4 = 1/2 inch O.D. Tubes - 1.25 x 1.08
5 = 5/8 inch O.D. Tubes - 1.50 x 1.29
9 = 1 1/8 inch O.D. Tubes - 3.0

Coil Type
WC = Chilled or Hot Water
CX = Condenser
NS = Steam Distributing (Same End)
NO= Steam Distributing (Opposite End)
DX = Direct Expansion
SS = Standard Steam

Number of Passes
*(Does Not Apply to Type N)*

Fin Height (Inches)

Fin Length (Inches)

Rows Deep

Fins per Inch

Fin Material
*A = Aluminum*
*C = Copper*

Hand of Connection
*RH = Right Hand*
*LH = Left Hand*

*See page 15 for Booster Coil Model*

## TABLE OF CONTENTS

The Temtrol Circuiting Advantage 2~3
Type WC Chilled or Hot Water Coils 4~5
Type DX Direct Expansion Coils 6~7
Type CX Condenser Coils 8~9
Type N Steam Distributing Coils 10~11
Type SS Standard Steam Coils 12~13
Type Z~A Hot Water Booster Coils 14~15
Abbreviations & Formulas 16
Simple Calculations for Sizing Replacement Coils 17

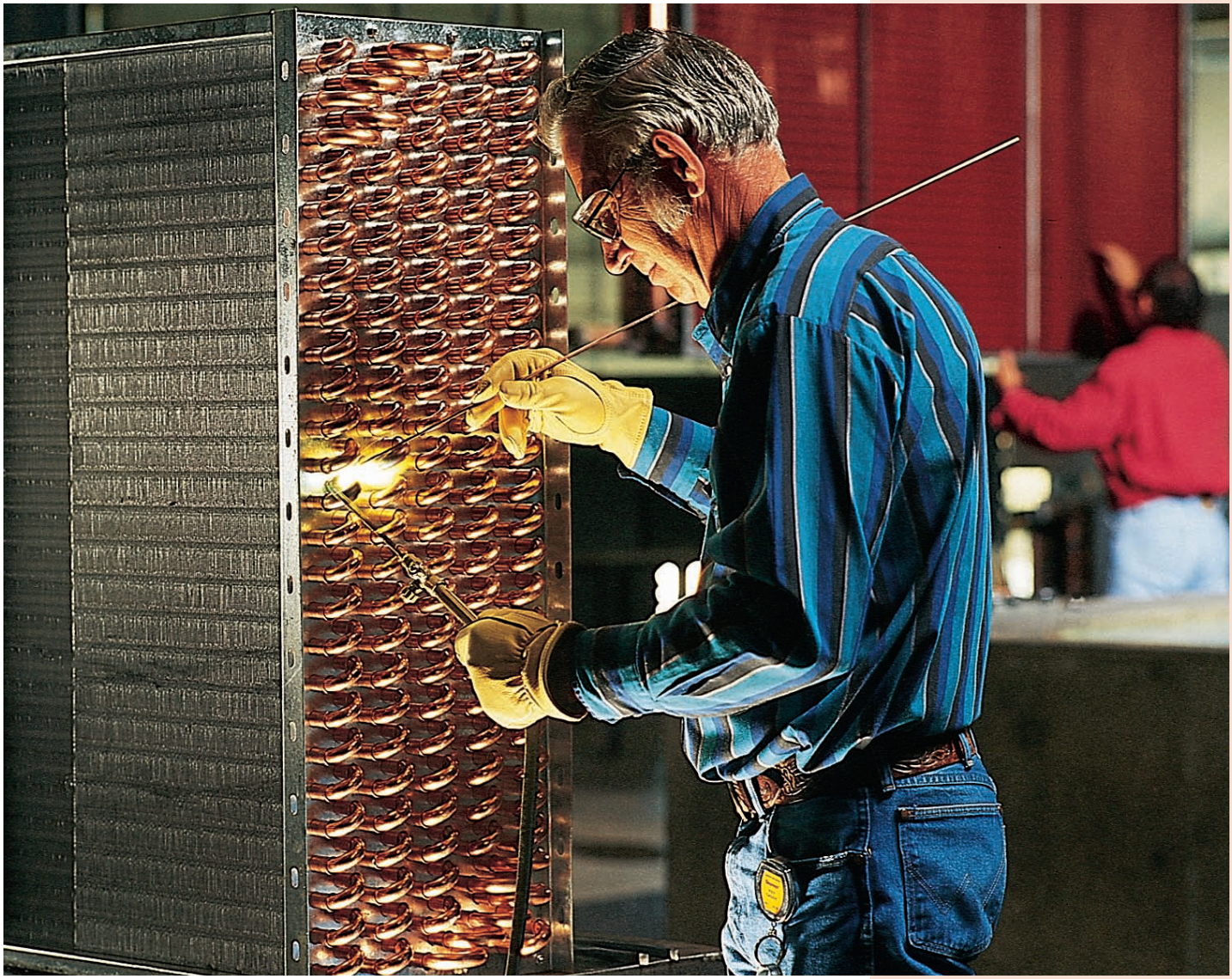

# Our Distinct Coil Circuiting Advantage Makes Temtrol the Best Choice for OEM & Replacement Coils

Temtrol provides more circuiting options than our competition, which is limited to double, full, three-quarters, half and quarter circuiting. Temtrol produces these and *all other possible options* in between. The following explains how this is possible.

The term *serpentine* or *serp* is used to describe the circuiting of a coil. It is a simple ratio that can be calculated one of two ways:

$$\text{Serpentine} = \frac{\text{Number of Coil Rows}}{\text{Number of Passes}}$$

*OR*

$$\text{Serpentine} = \frac{\text{Number of Circuits}}{\text{Number of Tubes in the Face}}$$

Drawings have been included on the inside back cover of this brochure which may be helpful in calculating the size of replacement coils.

**EXAMPLE:** A $^5/_8$ inch O.D. tube, 6-row coil having 20 tubes in the face with each tube being fed, for a total of 20 circuits. The serpentine is calculated by dividing the number of circuits by the number of tubes in the face.

$$\text{Serpentine} = \frac{\text{20 Circuits}}{\text{20 Tubes in the Face}} = 1.0$$

The number of tubes in the face will determine the fin height (FH) of the coil. Temtrol's $^5/_8$ inch O.D. tube coil is available in 1.5 inch increments on the fin height (the tubes are set at 1.5 inch centerlines). A $^1/_2$ inch O.D. tube coil is set at 1.25 inch centerlines. The fin height of the example coil will be the number of tubes in the face times 1.5 inch centerline.

20 tubes in the Face x 1.5 inches = 30.0 inches FH

*Passes* is the number of tubes per circuit in which fluid passes back and forth through the coil before exiting.

$$\text{Passes} = \frac{\text{Number of Coil Rows}}{\text{Serpentine}}$$

Using the example coil, the number of passes can be calculated by dividing the number of *rows* by the serpentine.

$$\text{Passes} = \frac{\text{6 Rows}}{\text{1.0 Serpentine}} = 6$$

After calculating the number of passes, the connection location can now be determined. For a coil to have same-end connections, the number of passes must be an even number. To obtain opposite-end connections, the number of passes will be an odd number.

The coil described in the previous example has six passes, resulting in same-end connections. The number of rows in a coil does not determine the connection location. The only determining factor for same-end or opposite-end connections is the number of passes.

**The ideal coil circuit is one in which every circuit has an equal number of tubes.** This is especially important for direct expansion coils, where there can be no unequal circuits.

$$\frac{\text{Tubes in the Face x Number of Coil Rows}}{\text{Passes}} = \text{Number of Circuits}$$

If this formula yields an integer (any whole number greater than zero…1, 2, 3, 4, etc.) for the number of circuits, every circuit will be equal. In the coil described in the previous example:

$$\frac{\text{20 Tubes in the Face x 6 Rows}}{\text{6 Passes}} = \text{20 Circuits}$$

Water velocity is another important factor to be considered. ***Remember…when using copper tubes, 6 feet per second (fps) is the maximum water velocity allowed.*** A minimum of 1 fps for heating and 2 fps for cooling is recommended.

$$\text{Water Velocity (fps)} = \frac{\text{"A" x GPM}}{\text{Number of Circuits}}$$

"A" = 1.09 for $^5/_8$ inch O.D. Tube
"A" = 1.71 for $^1/_2$ inch O.D. Tube

Water velocity will vary slightly with tube wall thickness. Let's assume that the example coil has a fluid flow rate of 150 gallons per minute (GPM). The next step is to check the water velocity.

$$\text{Water Velocity (fps)} = \frac{\text{1.09 x 150 GPM}}{\text{20 Circuits}}$$

The water velocity equals 8.175 fps. This is too high, based on the recommended maximum of 6 fps for copper tubes. The serpentine ratio on the coil must be increased.

By increasing the serpentine ratio, circuits are added and the number of passes is lowered. This also decreases the water pressure drop. On the other hand, if the water velocity had been too low, the serpentine ratio would need to be decreased to raise the water velocity. To maintain same-end connections on the example coil, four passes would be the next option.

*Temtrol… Coils Designed to Fit Your Requirements*

$$\frac{\text{20 Tubes in the Face x 6 rows}}{\text{4 Passes}} = \text{30 Circuits}$$

Using the formula to verify that the circuits are equal, the 4 pass coil will have 30 equal circuits. Next, recalculate the water velocity using 30 circuits.

$$\text{Water Velocity (fps)} = \frac{\text{1.09 x 150 GPM}}{\text{30 Circuits}}$$

The water velocity is now 5.45 fps, which is below the 6 fps maximum. At the same time, the water pressure drop has been lowered.

Two more commonly used terms are face area (in square feet) and face velocity (in feet per minute).

$$\text{Face Area} = \frac{\text{Fin Height x Fin Length}}{144}$$

$$\text{Face Velocity} = \frac{\text{CFM}}{\text{Face Area}}$$

## RECOMMENDED FACE VELOCITIES:

*The face velocity is another important consideration to keep in mind. Following are some recommendations:*

| Coil Type | Face Velocities Sensible (Dry) | Face Velocities Dehumidifying (Wet) |
|---|---|---|
| Chilled Water | 200 - 800 fpm | 200 - 500 fpm |
| Hot Water | 200 - 1500 fpm | |
| Direct Expansion | 200 - 800 fpm | 200 - 500 fpm |
| Steam | 200 - 1500 fpm | |

# Type WC
# Chilled or Hot Water Coils

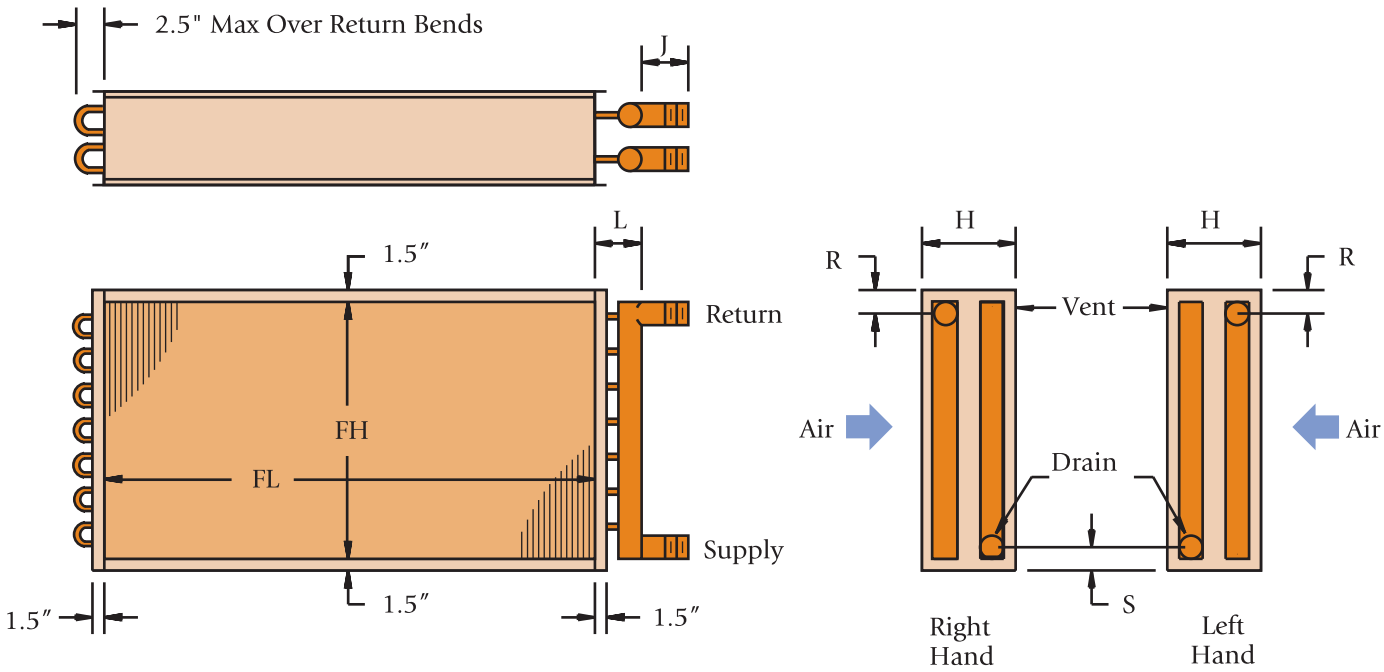


## Table WC

| Connection Size (MPT) | *1.25″* | *1.5″* | *2″* | *2.5″* | *3″* |
|---|---|---|---|---|---|
| **Max GPM | 20 | 35 | 65 | 115 | 180 |
| "L" | * 4.25″ | * 4.5″ | * 5″ | 5.5″ | 6″ |
| "M" | .625″ | .75″ | 1″ | 1.25″ | 1.625″ |

Notes:
1) All dimensions shown are in inches.
2) J = 5.5 inches.
3) R = Top flange plus "M."
4) S = Bottom flange plus "M."
5) * Minimum "L" for any serpentine > 1 = 5 (1/2″ tube) and 5.5 (5/8 inch tube).
6) ** Maximum GPM is based on 10 feet WPD per 100 feet.
7) When top or bottom flange are made flat, then headers will extend 1/2 inch above or below coil case.
8) For opposite end connections, consult factory.

| Rows | H *(1/2″ Tube)* | H *(5/8″ Tube)* |
|---|---|---|
| 1 | 5.5″ | 5.5″ |
| 2 | 6.5″ | 6.5″ |
| 3 | 6.5″ | 6.5″ |
| 4 | 6.5″ | 7.5″ |
| 5 | 7.5″ | 8.75″ |
| 6 | 8.5″ | 10″ |
| 8 | 10.5″ | 12.5″ |
| 10 | 13″ | 15″ |
| 12 | 15″ | 17.5″ |

## PRIMARY SURFACE

Round seamless copper tubes are mechanically expanded into the fin collars of the secondary surface. The mechanical expansion provides a permanent metal-to-metal bond for efficient heat transfer. Tubes are staggered in the direction of air flow and only *return bends* are used–NO reduced tube wall in the bend radius by using hairpin bends.

*Tube Size Options:*
5/8 inch O.D. x .020 inch wall thickness standard with optional wall thicknesses of (.025) (.035) and (.049). Centerlines are 1.5 inches in the tube face and 1.299 inches between rows.

1/2 inch O.D. x .017 inch wall thickness standard with optional wall thickness of (.025). Centerlines are 1.25 inches in the tube face and 1.083 inches between rows.

Rows available are 1, 2, 3, 4, 5, 6, 8, 10 and 12.

## SECONDARY SURFACE

Corrugated plate type fin that is die-formed. Fin collars are full-drawn to provide accurate control of fin spacing and maximum contact with tubes.

*Fin Material Options:*
5/8 inch tubes come standard with aluminum fin .008 inch thick with optional (.010). Optional copper fin thicknesses available are (.006) (.008) and (.010). Fins per inch available 6 through 14.

1/2 inch tubes come standard with aluminum fin .006 inch thick with optional copper fin (.006). Fins per inch available 8 through 14.

## HEADERS

Seamless copper with die-formed holes that provide a parallel surface to the coil tube for strong brazing joints. Standard 1/8 inch brass female pipe thread (FPT) vent and drain with optional (1/4), (3/8) and (1/2). All circuiting is designed to gravity-drain with the coil mounted vertically and tubes running horizontally.

## CONNECTIONS

Red Brass Schedule 40 male pipe thread (MPT) is standard with optional copper female pipe thread (FPT) available.

## CASING

Using 16 gauge minimum thickness material, 1 1/2 inch flanges are die-formed to permit easy stacking and mounting. Intermediate tube supports are supplied on coils over 44 inch fin length with an additional support every 42 inch multiple thereafter.

*Casing Material Options:*
Full G-90 galvanized steel standard with optional 304 stainless, aluminum and copper.

## TESTING & PERFORMANCE

All coil assemblies are leak tested under water at 315 PSIG nitrogen. Standard construction is suitable for 250 PSIG and up to 300° F.

PERFORMANCE is CERTIFIED under ARI Standard 410. All coil performance ratings are according to Temtrol's ARI certified selection software.

Temtrol®

*Type WC Chilled or Hot Water Coils*

# Type DX
# Direct Expansion Coils

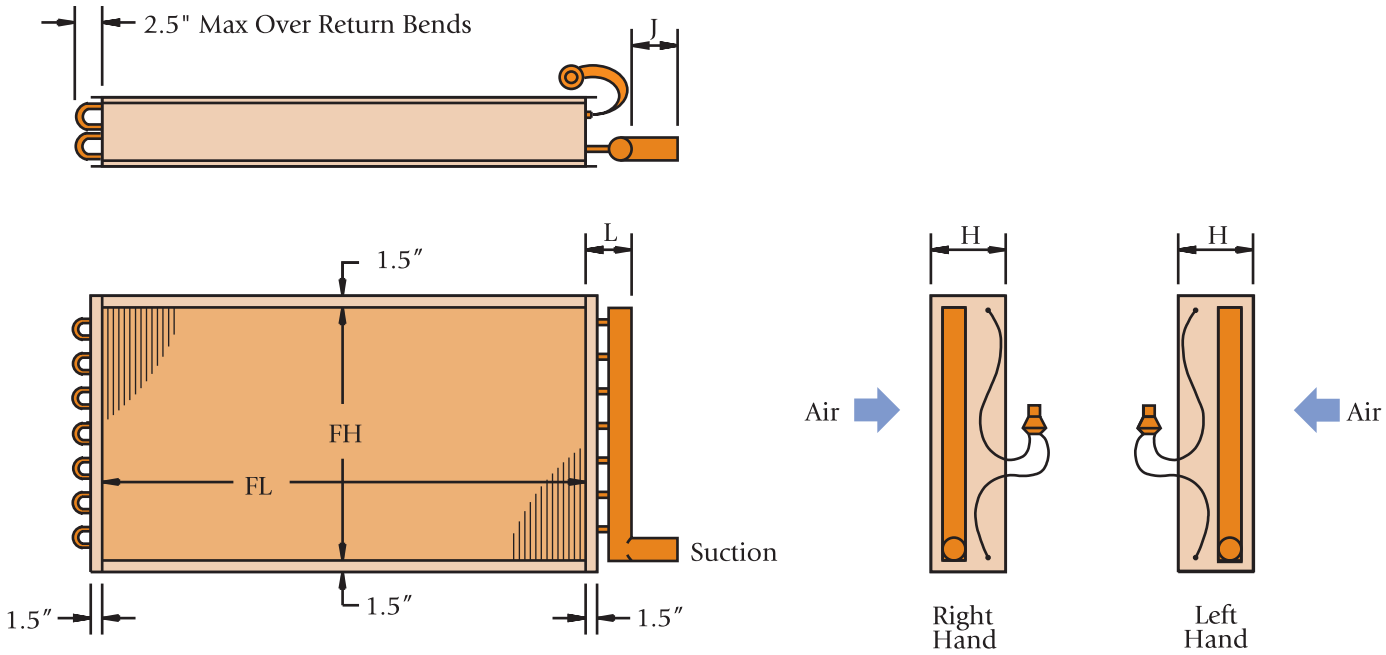


## Table DX

| Connection Size (SWT) | .875″ | 1.125″ | 1.375″ | 1.625″ | 2.125″ | 2.625″ |
|---|---|---|---|---|---|---|
| **Tons | 4.3 | 8.6 | 15.1 | 23.7 | 49.5 | 86.5 |
| "L" | *4.25″ | *4.25″ | *4.25″ | *4.5″ | * 5″ | 5.5″ |

Notes:
1) All dimensions shown are in inches.
2) J = 6 inches.
3) * Minimum "L" for any serpentine > 1 = 5 (1/2 inch tube) and 5.5 (5/8 inch tube).
4) ** Based on R22 at 40° F suction, 50 feet at 3 PSIG.
5) When top or bottom flange are made flat, then headers will extend 1/2 inch above or below coil case.

| Rows | H (1/2″ Tube) | H (5/8″ Tube) |
|---|---|---|
| 3 | 6.5″ | 6.5″ |
| 4 | 6.5″ | 7.5″ |
| 5 | 7.5″ | 8.75″ |
| 6 | 8.5″ | 10″ |
| 8 | 10.5″ | 12.5″ |
| 10 | 13″ | 15″ |
| 12 | 15″ | 17.5″ |

## PRIMARY SURFACE

Round seamless copper tubes are mechanically expanded into the fin collars of the secondary surface. The mechanical expansion provides a permanent metal-to-metal bond for efficient heat transfer. Tubes are staggered in the direction of air flow and only *return bends* are used–NO reduced tube wall in the bend radius by using hairpin bends.

*Tube Size Options:*
5/8 inch O.D. x .020 inch wall thickness standard with optional wall thickness of (.025). Centerlines are 1.5 inches in the tube face and 1.299 inches between rows.

1/2 inch O.D. x .017 inch wall thickness standard with optional wall thickness of (.025). Centerlines are 1.25 inches in the tube face and 1.083 inches between rows.

Rows available are 3, 4, 5, 6, 8, 10 and 12.

## SECONDARY SURFACE

Corrugated plate type fin that is die-formed. Fin collars are full-drawn to provide accurate control of fin spacing and maximum contact with tubes.

*Fin Material Options:*
5/8 inch tubes come standard with aluminum fin .008 inch thick with optional (.010). Optional copper fin thicknesses available are (.006) (.008) and (.010). Fins per inch available 6 through 14.

1/2 inch tubes come standard with aluminum fin .006 inch thick with optional copper fin (.006). Fins per inch available 8 through 14.

## HEADERS

Seamless copper with die-formed holes that provide a parallel surface to the coil tube for strong brazing joints.

## CONNECTIONS

Copper O.D. sweat with interchangeable nozzle type refrigerant distributors. Standard coil has one distributor for one compressor circuit. An INTERTWINED coil has two distributors that provide full face control using two compressor circuits. A FACE SPLIT coil has two or more distributors for multiple compressor circuits.

## CASING

Using 16 gauge minimum thickness material, 1 1/2 inch flanges are die-formed to permit easy stacking and mounting. Intermediate tube supports are supplied on coils over 44 inch fin length with an additional support every 42 inch multiple thereafter.

*Casing Material Options:*
Full G-90 galvanized steel standard with optional 304 stainless, aluminum and copper.

## TESTING & PERFORMANCE

All coil assemblies are leak tested under water at 315 PSIG nitrogen.

PERFORMANCE is CERTIFIED under ARI Standard 410. All coil performance ratings are according to Temtrol's ARI certified selection software.

Temtrol®

*Type DX Direct Expansion Coils*

MANUFACTURER CERTIFIED TO ARI AS COMPLYING WITH ARI STANDARD 410 FORCED-CIRCULATION AIR-COOLING and AIR-HEATING COILS

# Type CX Condenser Coils

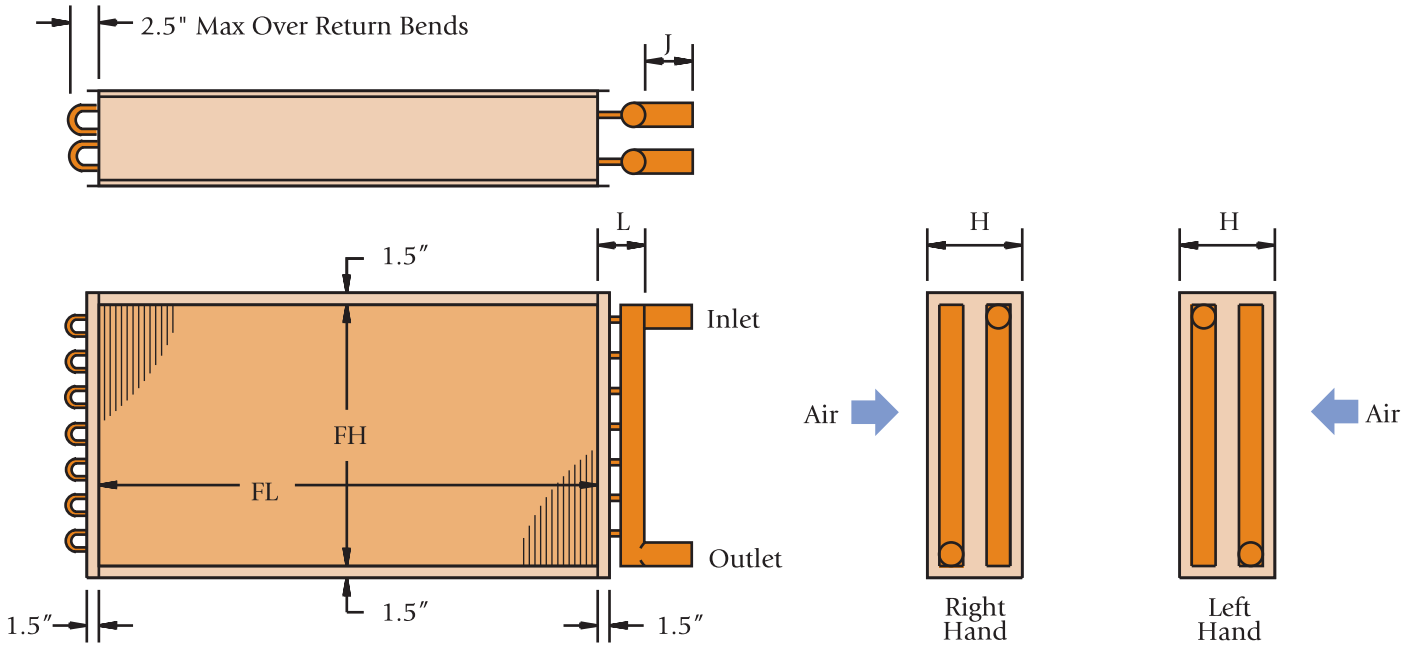


## Table CX

| Connection Size (SWT) | .875″ | 1.125″ | 1.375″ | 1.625″ | 2.125″ |
|---|---|---|---|---|---|
| **Tons | 7.4 | 15.1 | 26.5 | 40.9 | 86.0 |
| "L" | *4.25″ | *4.25″ | *4.25″ | *4.5″ | * 5″ |

Notes:
1) All dimensions shown are in inches.
2) J = 6 inches.
3) * Minimum "L" for any serpentine > 1 = 5 (1/2 inch tube) and 5.5 (5/8 inch tube).
4) ** Based on R22 at 40° F suction, 50 feet at 4 PSIG.
5) When top or bottom flange are made flat, then headers will extend 1/2 inch above or below coil case.

| Rows | H (1/2″ Tube) | H (5/8″ Tube) |
|---|---|---|
| 1 | 5.5″ | 5.5″ |
| 2 | 6.5″ | 6.5″ |
| 3 | 6.5″ | 6.5″ |
| 4 | 6.5″ | 7.5″ |
| 5 | 7.5″ | 8.75″ |
| 6 | 8.5″ | 10″ |
| 8 | 10.5″ | 12.5″ |
| 10 | 13″ | 15″ |
| 12 | 15″ | 17.5″ |

## PRIMARY SURFACE

Round seamless copper tubes are mechanically expanded into the fin collars of the secondary surface. The mechanical expansion provides a permanent metal-to-metal bond for efficient heat transfer. Tubes are staggered in the direction of air flow and only *return bends* are used–NO reduced tube wall in the bend radius by using hairpin bends.

*Tube Size Options:*
5/8 inch O.D. x .020 inch wall thickness standard with optional wall thickness of (.025). Centerlines are 1.5 inches in the tube face and 1.299 inches between rows.

1/2 inch O.D. x .017 inch wall thickness standard with optional wall thickness of (.025). Centerlines are 1.25 inches in the tube face and 1.083 inches between rows.

Rows available are 1, 2, 3, 4, 5, 6, 8, 10 and 12.

## SECONDARY SURFACE

Corrugated plate type fin that is die-formed. Fin collars are full-drawn to provide accurate control of fin spacing and maximum contact with tubes.

*Fin Material Options:*
5/8 inch tubes come standard with aluminum fin .008 inch thick with optional (.010). Optional copper fin thicknesses available are (.006) (.008) and (.010). Fins per inch available 6 through 14.

1/2 inch tubes come standard with aluminum fin .006 inch thick with optional copper fin (.006). Fins per inch available 8 through 14.

## HEADERS

Seamless copper with die-formed holes that provide a parallel surface to the coil tube for strong brazing joints.

## CONNECTIONS

Copper O.D. sweat with standard arrangement for one compressor circuit. FACE SPLIT circuiting available for two or more compressors.

## CASING

Using 16 gauge minimum thickness material, 1 1/2 inch flanges are die-formed to permit easy stacking and mounting. Intermediate tube supports are supplied on coils over 44 inch fin length with an additional support every 42 inch multiple thereafter.

*Casing Material Options:*
Full G-90 galvanized steel standard with optional 304 stainless, aluminum and copper.

## TESTING & PERFORMANCE

All coil assemblies are leak tested under water at 400 PSIG nitrogen.

Temtrol®

*Type CX Condenser Coils*

# Type N
# Steam Distributing Coils

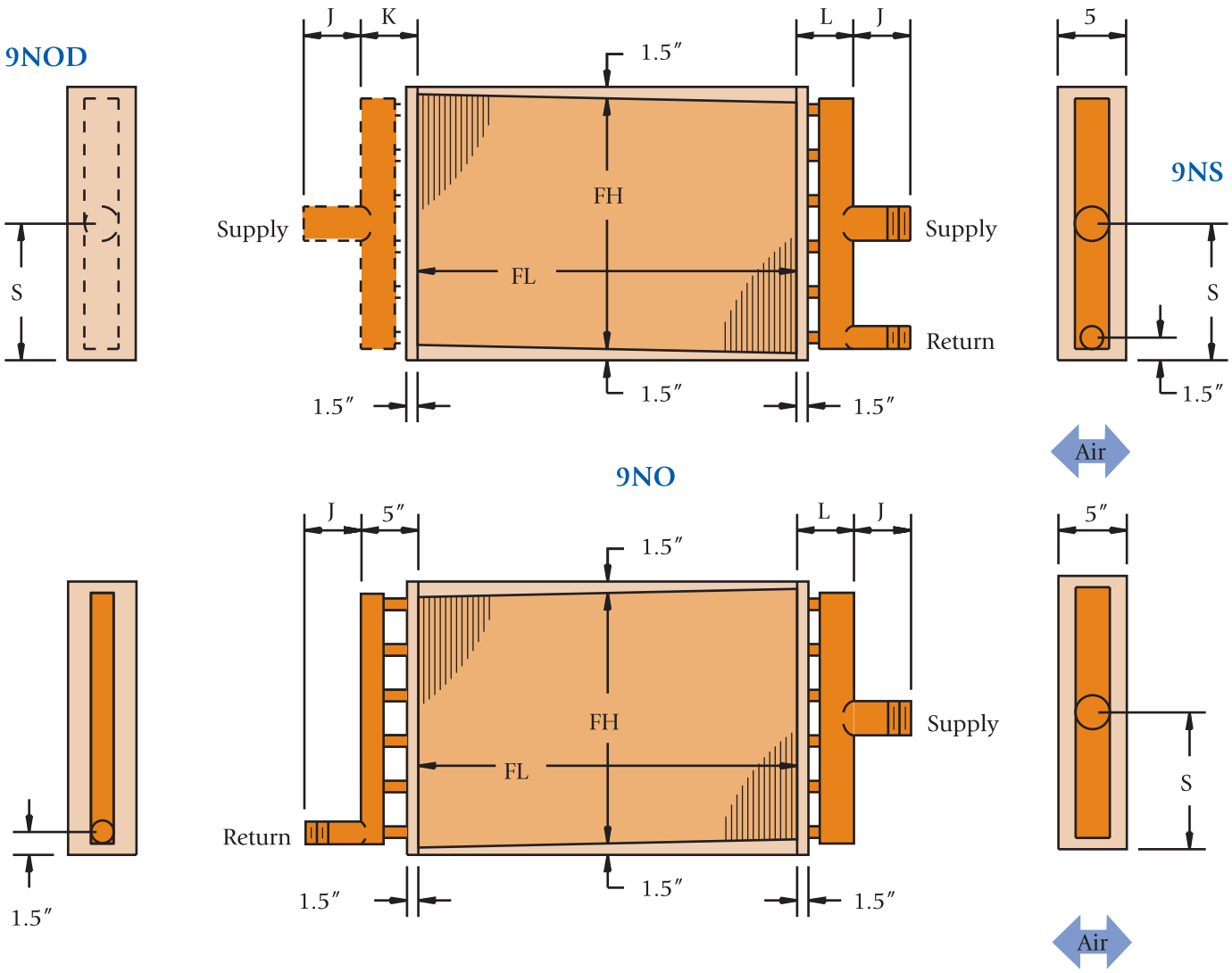


## Table N

| Connection Size (MPT) | | Condensate *(Pounds/Hour) | "K" (9NOD) | "L" (9NO) | "L" (9NS) |
|---|---|---|---|---|---|
| *Supply* | *Return* | | | | |
| 1.5″ | 1.5″ | 0 - 900 | 5″ | 5″ | 5.5″ |
| 2 | 1.5″ | 901 - 1700 | 5″ | 5″ | 5.5″ |
| 2.5″ | 1.5″ | 1701 - 2750 | 5″ | 5″ | 5.5″ |
| 3″ | 2″ | 2751 - 4600 | 5.5″ | 5.5″ | 5.5″ |

Notes:
1) All dimensions shown are in inches.
2) J = 5.5 inches.
3) * Based on low pressure steam (less than 15 PSIG).
4) S = (FH plus [top and bottom flange] ) divided by two.
5) Standard red brass connections are available only in 5.5 inch length.

## PRIMARY SURFACE

Round seamless copper tubes are mechanically expanded into the fin collars of the secondary surface. The mechanical expansion provides a permanent metal-to-metal bond for efficient heat transfer. The 5/8 inch O.D. inner steam distributing tubes are centered in the outer condensing tube (1 1/8 inch O.D.). The inner tube has proportionally spaced directional steam jet orifices that direct the condensate flow to the outlet.

*Tube Size Options:*
1 1/8 inch O.D. x .035 inch wall thickness standard with optional wall thickness of (.049). Centerlines are 3.0 inches in the tube face and one row is the only option.

## SECONDARY SURFACE

Corrugated plate type fin that is die-formed. Fin collars are full-drawn to provide accurate control of fin spacing and maximum contact with tubes.

*Fin Material Options:*
Aluminum fin thickness of .010 inch standard. Optional copper fin thickness of (.010). Fins per inch available 6 through 14.

## HEADERS

Seamless copper with die-formed holes that provide a parallel surface to the coil tube for strong brazing joints.

## CONNECTIONS

Red brass Schedule 40 male pipe thread (MPT) is standard with optional copper female pipe thread (FPT) available. Maximum fin length of 120 inches with same end connections. Fin length over 120 inches is recommended to have steam supplied at both ends (Type 9NOD). Any fin height over 48 inches will have two supplies and two returns.

## CASING

Using 16 gauge minimum thickness material, 1 1/2 inch flanges are die-formed to permit easy stacking and mounting. Casing is pitched nominal 1/8 inch per foot to facilitate condensate removal. Intermediate tube supports are supplied on coils over 44 inch fin length with an additional support every 42 inch multiple thereafter.

*Casing Material Options:*
Full G-90 galvanized steel standard with optional 304 stainless, aluminum and copper.

## TESTING & PERFORMANCE

All coil assemblies are leak tested under water at 315 PSIG nitrogen. Standard construction is suitable for 50 PSIG steam pressure. Heavier wall construction is available up to 100 PSIG.

PERFORMANCE is CERTIFIED under ARI Standard 410. All coil performance ratings are according to Temtrol's ARI certified selection software.

## TYPE 5NS

5/8 inch O.D. outer with 3/8 inch O.D. inner steam distributing tube available upon request, consult factory.

Temtrol®

*Type N Steam Distributing Coils*

# Type SS
# Standard Steam Coils

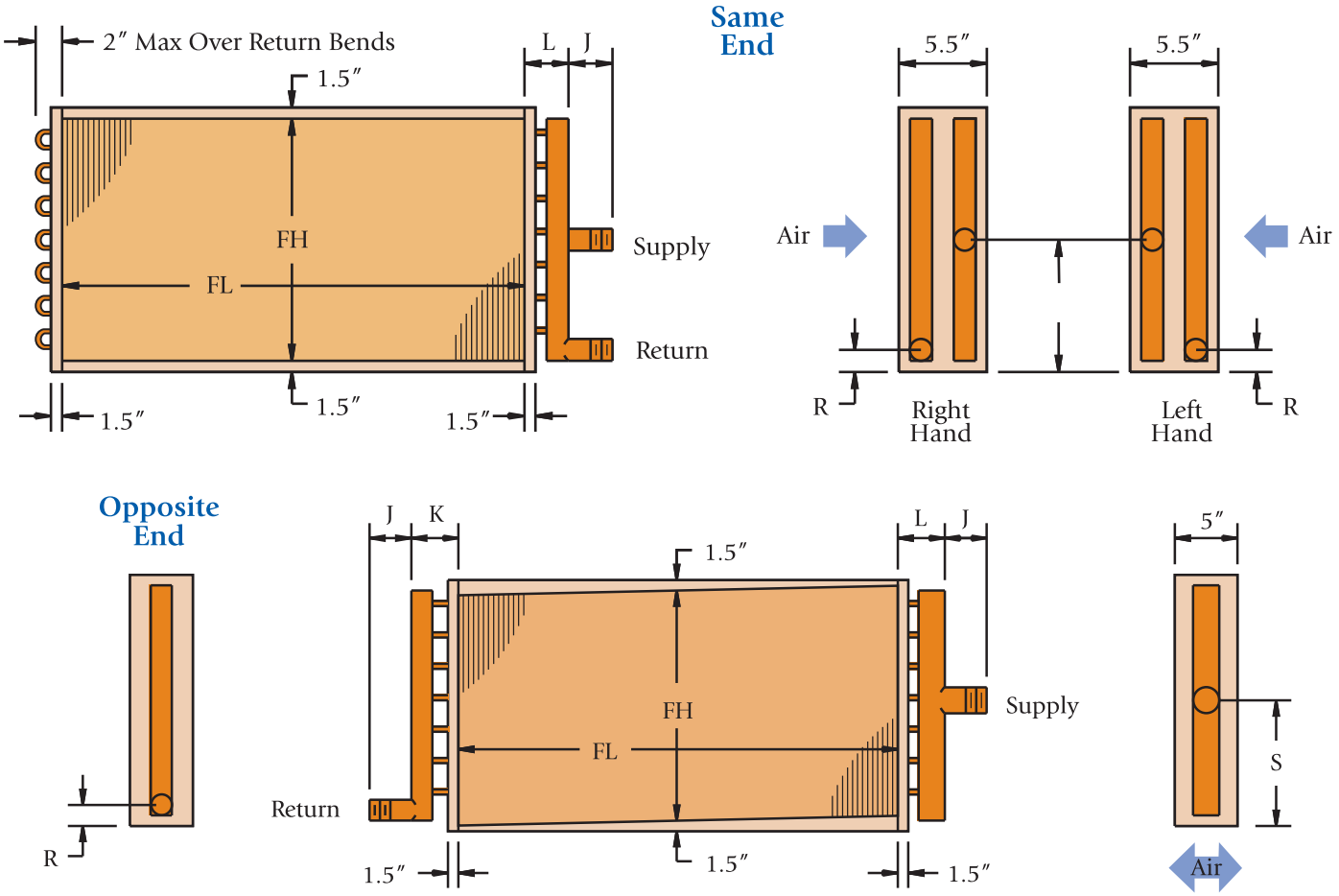


## Table SS

| Connection Size (MPT) | | Condensate *(Pounds/Hour) | Same End | Opposite End | | | | "M" |
|---|---|---|---|---|---|---|---|---|
| | | | | *1 Row* | | *2 Rows* | | |
| Supply | Return | | "L" | "L" | "K" | "L" | "K" | |
| 1.5″ | 1.5″ | 0 - 900 | 4.5″ | 4″ | 4″ | 5″ | 5″ | .75″ |
| 2″ | 1.5″ | 901 - 1700 | 5″ | 4.5″ | 4″ | 5″ | 5″ | .75″ |
| 2.5″ | 1.5″ | 1701 - 2750 | 5.5″ | 5″ | 4″ | 5″ | 5″ | .75″ |
| 3″ | 2″ | 2751 - 4600 | 6″ | 5.5″ | 4.5″ | 5.5″ | 5″ | 1″ |

Notes:
1) All dimensions shown are in inches.
2) J = 5.5 inches.
3) R = Bottom flange plus "M."
4) S = (FH plus [top and bottom flange] ) divided by two.
5) When top or bottom flange are made flat, then headers will extend 1/2 inch above or below coil case.
6) * Based on low pressure steam (less than 15 PSIG).

## PRIMARY SURFACE

Round seamless copper tubes are mechanically expanded into the fin collars of the secondary surface. The mechanical expansion provides a permanent metal-to-metal bond for efficient heat transfer. Tubes are staggered in the direction of air flow and only *return bends* are used–NO reduced tube wall in the bend radius by using hairpin bends.

*Tube Size Options:*
5/8 inch O.D. x .025 inch wall thickness standard with optional thicknesses of (.035) and (.049). Centerlines are 1.5 inches in the tube face and 1.299 inches between rows.

Rows available are 1 or 2.

## SECONDARY SURFACE

Corrugated plate type fin that is die-formed. Fin collars are full-drawn to provide accurate control of fin spacing and maximum contact with tubes.

*Fin Material Options:*
Aluminum fin thickness of .008 inch standard with optional (.010). Optional copper fin thicknesses available are (.006) (.008) and (.010). Fins per inch available 6 through 14.

## HEADERS

Seamless copper with die-formed holes that provide a parallel surface to the coil tube for strong brazing joints.

## CONNECTIONS

Red brass Schedule 40 male pipe thread (MPT) is standard with optional copper female pipe thread (FPT) available. Maximum fin length of 108 inches with same end connections. Steam pressure above 50 PSIG will have opposite end connections. Any fin height over 48 inches will have two supplies and two returns.

## CASING

Using 16 gauge minimum thickness material, 1 1/2 inch flanges are die-formed to permit easy stacking and mounting. Intermediate tube supports are supplied on coils over 44 inch fin length with an additional support every 42 inch multiple thereafter.

*Casing Material Options:*
Full G-90 galvanized steel standard with optional 304 stainless, aluminum and copper.

## TESTING & PERFORMANCE

All coil assemblies are leak tested under water at 315 PSIG nitrogen. Standard construction is suitable for 25 PSIG steam pressure. Heavier wall construction is available up to 100 PSIG.

PERFORMANCE is CERTIFIED under ARI Standard 410. All coil performance ratings are according to Temtrol's ARI certified selection software.

Temtrol®

*Type SS Standard Steam Coils*

# Type Z–A
# Hot Water Booster Coils

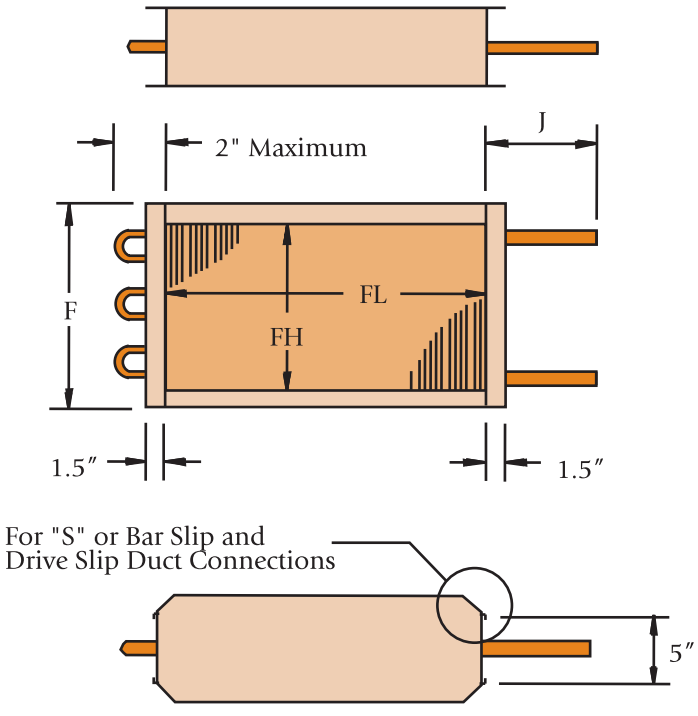


## Casing Type Z

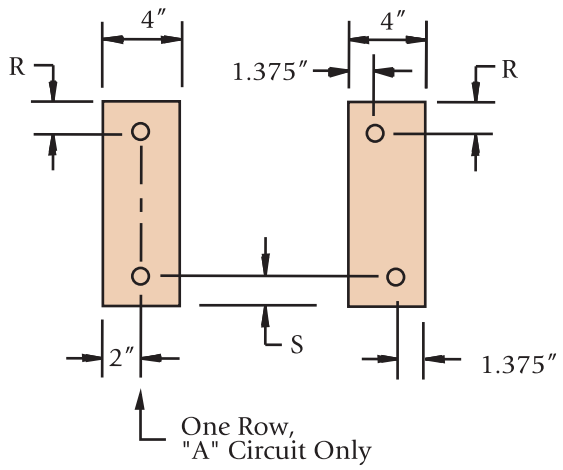


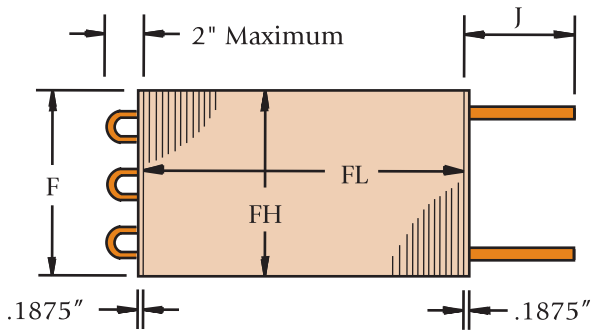


## Casing Type A

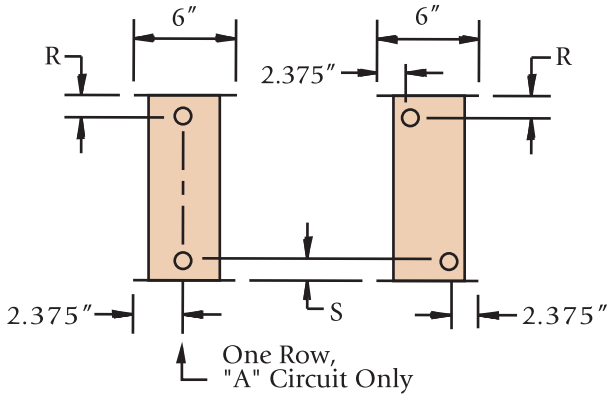


## Table Z-A

| Casing Type | "Z" | | | | | "A" | | | | |
|---|---|---|---|---|---|---|---|---|---|---|
| "F" | *FH + 3* | | | | | *FH + 1/8* | | | | |
| Rows | *1* | | *2* | | | *1* | | *2* | | |
| Circuit | A | G | A | B | G | A | G | A | B | G |
| Connection Size | .5″ | 1″ | .5″ | .75″ | 1″ | .5″ | 1″ | .5″ | .75″ | 1″ |
| "J" | 3.5″ | 6″ | 3.5″ | | 6″ | 3.5″ | 6″ | 3.5″ | | 6″ |
| "R" | 1.875″ | 2″ | 1.875″ | | 2″ | .375″ | .5″ | .375″ | | .5″ |
| "S" | 2.625″ | 2″ | 1.875″ | | 2″ | 1.125″ | .5″ | .375″ | | .5″ |

Note: 1) All dimensions shown are in inches.

## PRIMARY SURFACE

Round seamless copper tubes are mechanically expanded into the fin collars of the secondary surface. The mechanical expansion provides a permanent metal-to-metal bond for efficient heat transfer. Tubes are staggered in the direction of air flow and only *return bends* are used–NO reduced tube wall in the bend radius by using hairpin bends.

*Tube Size Options:*
5/8 inch O.D. x .020 inch wall thickness. Centerlines are 1.5 inches in the tube face and 1.299 inches between rows.

Rows available are 1 or 2.

## SECONDARY SURFACE

Corrugated plate type fin that is die-formed. Fin collars are full-drawn to provide accurate control of fin spacing and maximum contact with tubes.

*Fin Material Options:*
Aluminum fin .008 inch thick. Fins per inch available are 10 for 1 row, 8 for 2 row.

## HEADERS

(Where furnished) are seamless copper with die-formed holes that provide a parallel surface to the coil tube for strong brazing joints. All circuiting is designed to gravity-drain with the coil mounted vertically and tubes running horizontally.

## CONNECTIONS

Wrot copper male pipe thread (MPT).

## CASING

Casing Type Z is 16 gauge galvanized steel with die-formed flanges to permit easy mounting. Casing Type A is 20 gauge galvanized steel with die-formed bar for "slip & drive" duct connections.

## TESTING & PERFORMANCE

All coil assemblies are leak tested under water at 315 PSIG nitrogen. Standard construction is suitable for 250 PSIG and up to 300° F.

PERFORMANCE is CERTIFIED under ARI Standard 410. All coil performance ratings are according to Temtrol's ARI certified selection software.

## BOOSTER COIL MODEL

Z - 10 - A - 2 - B - 12 - 24

- Casing Type (Z, A)
- FPI (8, 10)
- Aluminum Fin
- Rows (1 or 2)
- Circuit (A, B, G)
- Fin Height
- Fin Length

Temtrol®

*Type Z-A Hot Water Booster Coils*

MANUFACTURER CERTIFIED TO ARI AS COMPLYING WITH ARI STANDARD 410 FORCED-CIRCULATION AIR-COOLING and AIR-HEATING COILS

# Formulas & Abbreviations

## FORMULAS

### Face Area:

$$FA = \frac{FH \times FL}{144}$$

### Face Velocity:

$$FV = \frac{SCFM}{FA}$$

### Cooling Coils:

$$TH = 4.5 \times SCFM \times (A)$$

$$A = \text{Enthalpy of EWB} - \text{Enthalpy of LWB}$$

$$SH = 1.08 \times SCFM \times (EDB - LDB)$$

$$GPM = \frac{TH}{500\ (LWT - EWT)}$$

### Heating Coils:

$$SH = 1.08 \times SCFM \times (LDB - EDB)$$

$$GPM = \frac{SH}{500\ (EWT - LWT)}$$

### Water Velocity (Heating or Cooling):

$$FPS = \frac{B \times GPM}{\text{Number of Tubes Fed}}$$

| Tube | | |
|---|---|---|
| *B* | *O.D.* | *Wall* |
| 1.717″ | .5″ | .017″ |
| 1.835″ | .5″ | .025″ |
| 1.092″ | .625″ | .020″ |
| 1.128″ | .625″ | .025″ |
| 1.207″ | .625″ | .035″ |
| 1.332″ | .625″ | .049″ |

## ABBREVIATIONS

APD = Air Pressure Drop – Inches W.C.

BTUH = British Thermal Units / Hour

EDB = Entering Dry Bulb – ° F

EWB = Entering Wet Bulb – ° F

EWT = Entering Water Temperature – ° F

FA = Face Area – Square Feet

FH = Fin Height

FL = Fin Length

FPM = Feet / Minute

FPS = Feet / Second

FV = Face Velocity in FPM

GPM = Gallons / Minute

LDB = Leaving Dry Bulb – ° F

LWB = Leaving Wet Bulb – ° F

LWT = Leaving Water Temperature – ° F

SCFM = Standard Cubic Feet of Air / Minute

SH = Sensible Heat – BTUH

TH = Total Heat – BTUH

WPD = Water Pressure Drop – Feet

WV = Water Velocity in FPS

*Standard Industry Abbreviations*
*All dimensions on this page are in inches.*

# Simple Calculations for Sizing Replacement Coils

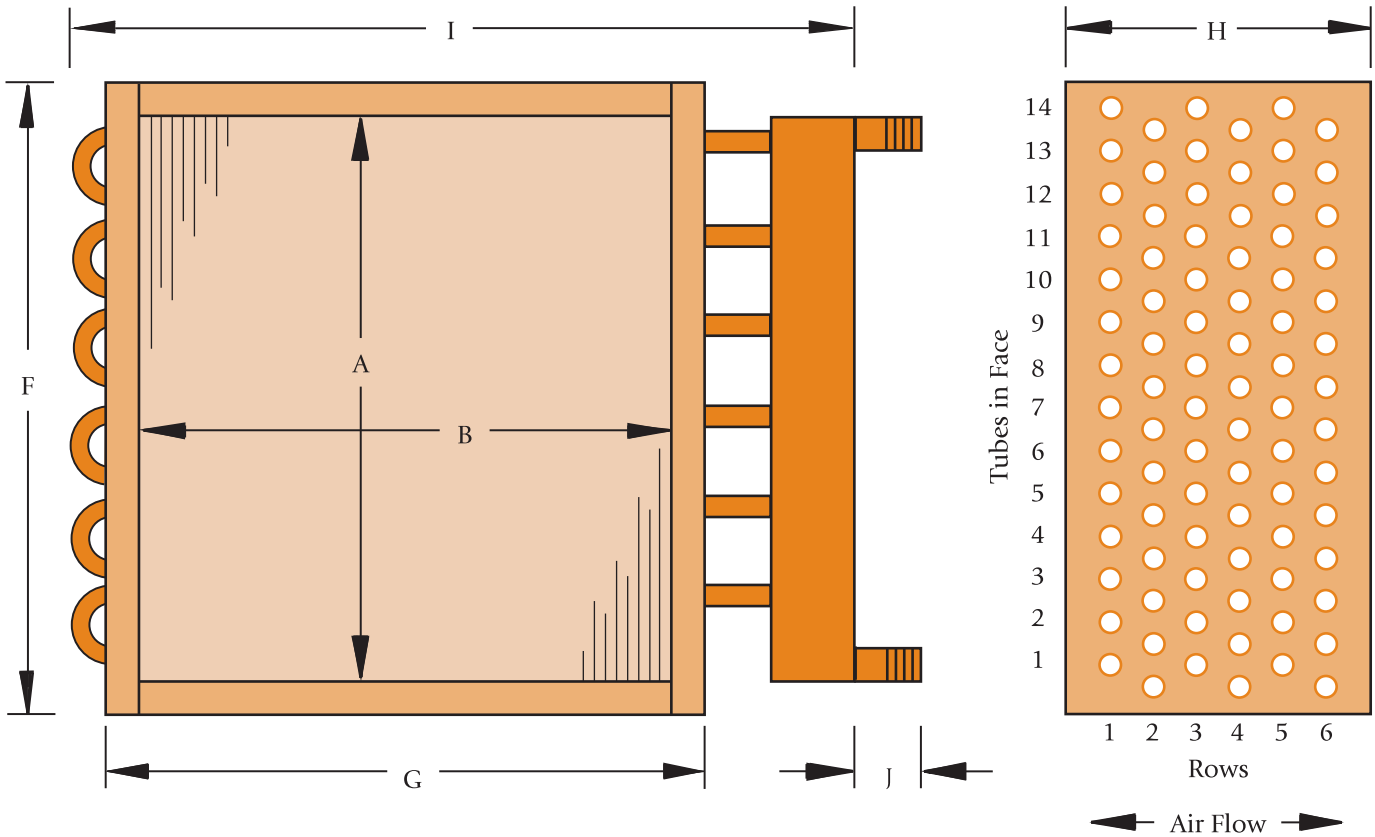


_____ Tube Size O.D.
_____ A (Fin Height)
_____ B (Fin Length)
_____ Rows
_____ FPI (Fins per Inch)
_____ Fin Material (AL or CU)
_____ I (Overall Length)
_____ F (Casing Height)
_____ G (Casing Length)
_____ H (Casing Depth)
_____ Casing Material (GV or SS)
_____ Supply Conn. Size
_____ Return Conn. Size
_____ J (Stub Length)
_____ Conn. Type (MPT/FPT/SWT)
_____ Conn. Material

## Performance

_____ CFM
____/____ EDB/EWB
____/____ LDB/LWB
_____ Total (BTUH)
_____ Sensible (BTUH)
_____ EWT
_____ LWT
_____ GPM
_____ Suction
_____ Steam PSIG

Temtrol®
15 E. Oklahoma Ave. • P.O. Box 409
Okarche, Oklahoma 73762
(405) 263-7286 • FAX (405) 263-4980
www.temtrol.com

*Manufactured in the U.S.A.*

15 EAST OKLAHOMA AVENUE • P.O. BOX 409 • OKARCHE, OKLAHOMA 73762
(405) 263-7286 • FAX (405) 263-4980 • www.temtrol.com